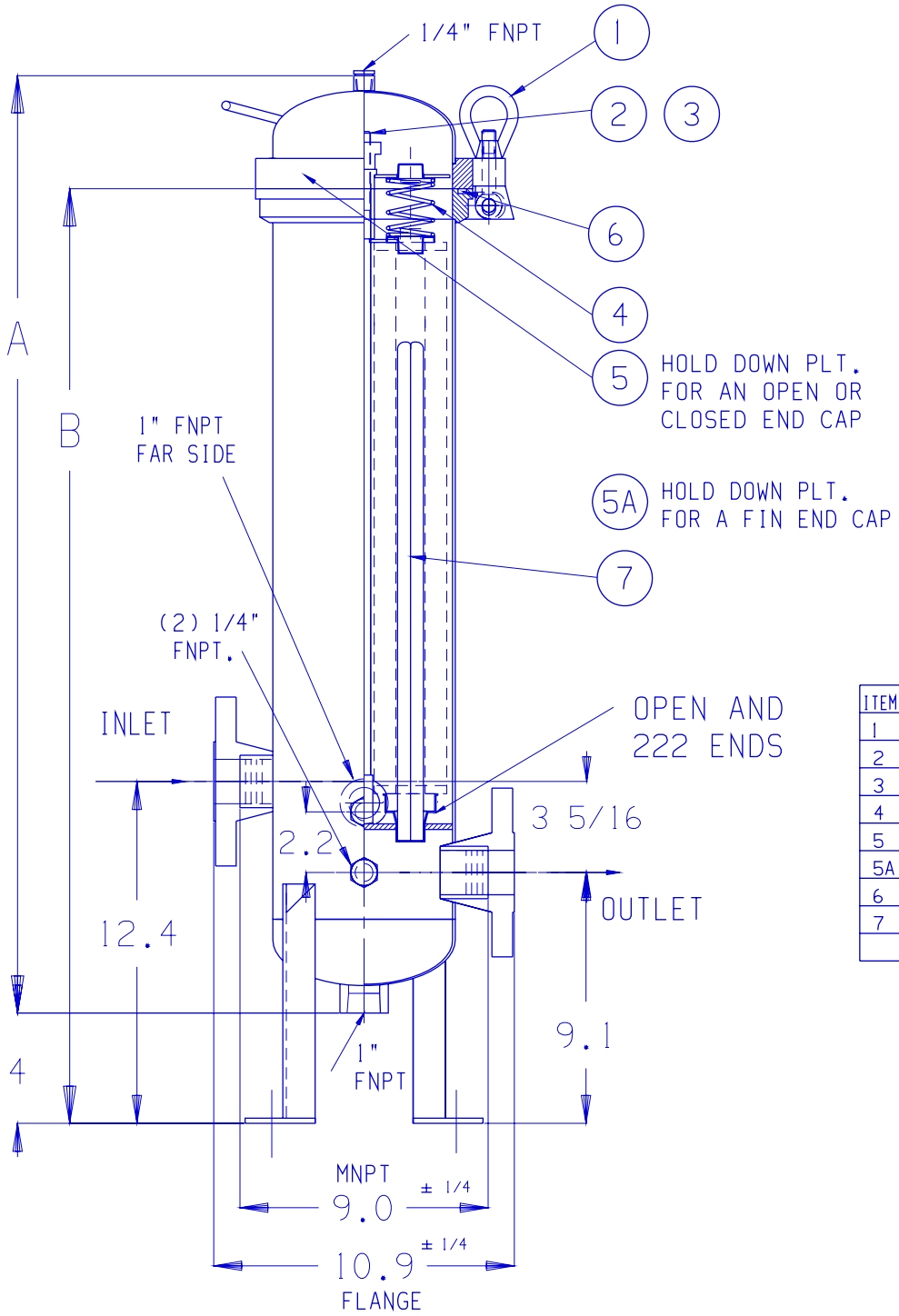

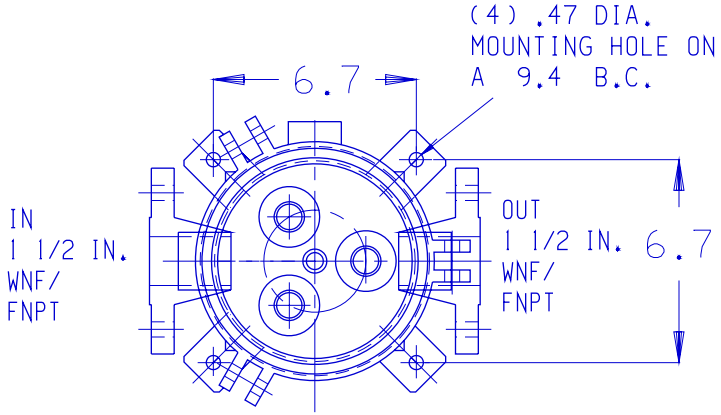

CARTRIDGE	A (IN.)	B (IN.)	PART NO.	WGT.	SHP. BOX SIZE (IN.)
20 INCH	34	33.9	GTCH32-	43 LB	12 X 12 X 39
30 INCH	44	43.9	GTCH33-	49 LB.	12 X 12 X 49
40 INCH	54	53.9	GTCH34-	54 LB	12 X 12 X 59

ITEM	QUT.	DESCRIPTION	PART NO.
1	3	EYEBOLT KIT. 1/2-13 UNC X 3 LG.	G-EBA-4-4-3-(GB OR EP)
2	1	TIE ROD NUT (M12)	G-TRN-6
3	1	TIE ROD. THD. BOTH ENDS (M12)	G-TR-6-20.30.40
4	3	SPRING HOLD DOWN	G-SA-6
5	1	HOLD DOWN PLT:CLOSED & DOE CART.	GTCH3-6-D-HD (GB OR EP)
5A	1	HOLD DOWN PLT: FIN CARTRIDGE	GTCH3-6-2-D-HD (GB OR EP)
6	1	SEAL O-RING BUNA-N STD.	G-O-RING
7	3	V-POST	G-VP-6-20.30.40

	NAME	DATE
DRAWN	GA	8/16/10
REV.	A	01/19/11
MAT.	SEE DATA SHEET	
FINISH	SEE DATA SHEET	

COMMENTS:
SEE VESSEL DATA
SHEET FOR OPTIONS

GLOBAL FILTER LLC

CEDAR RAPIDS.IA

(3) CARTRIDGE HOUSING
GTCH3 SERIES
DOE AND 222 SEAL

SIZE A | GTCH3-1.5-F-N-OS | REV. A

SHEET OF