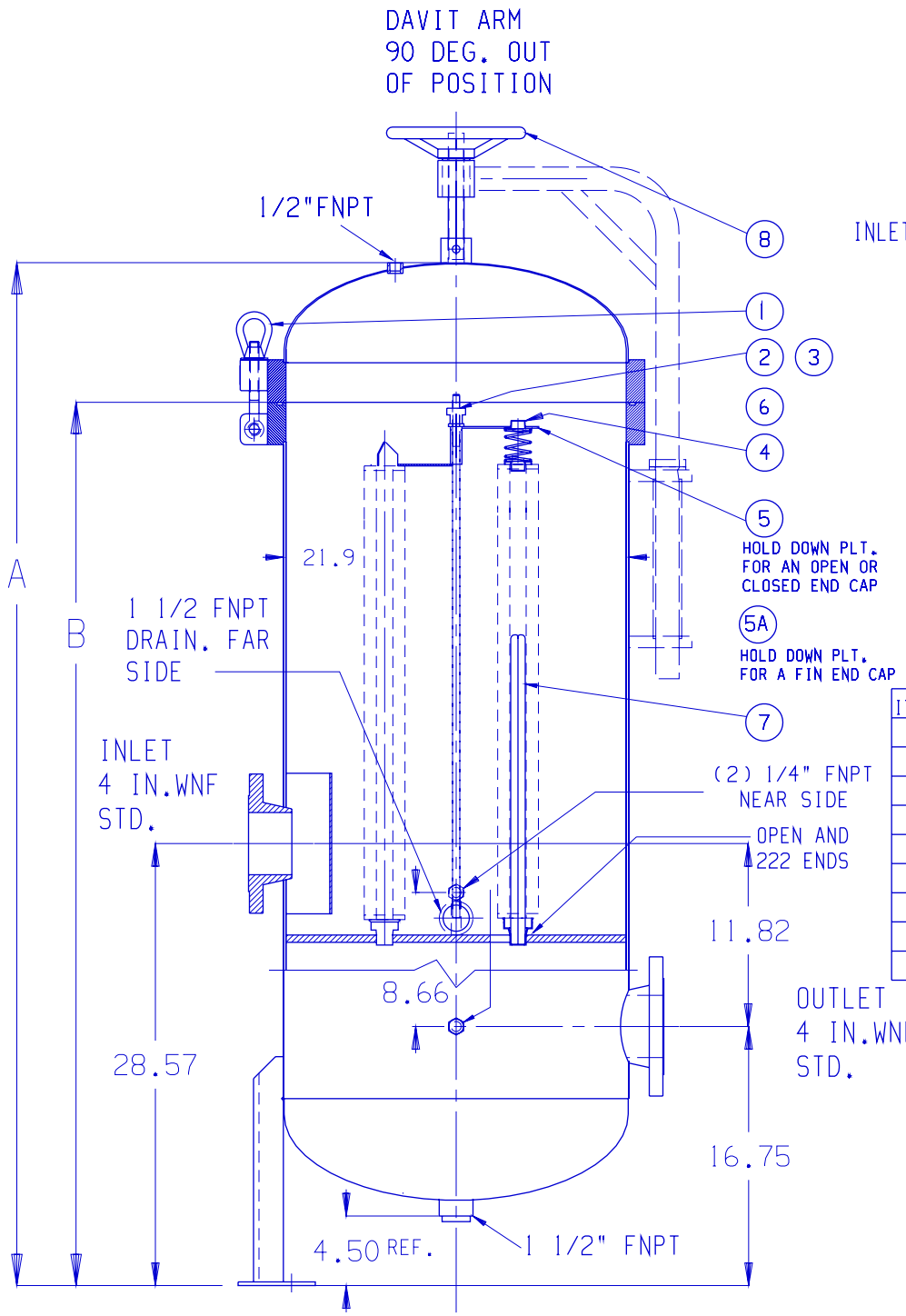


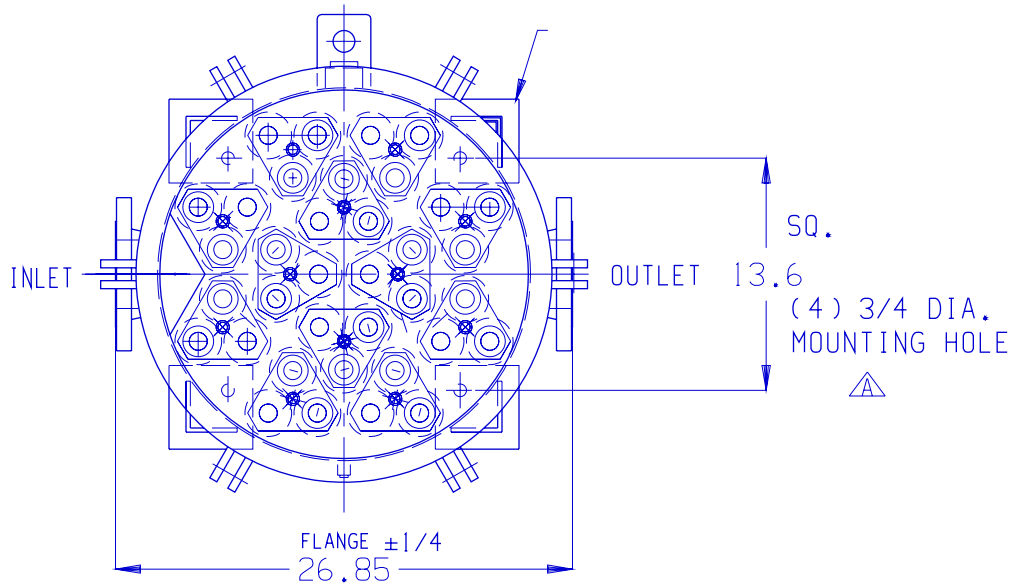


| CARTRIDGE | A (IN.) | B (IN.) | PART NO. | SHIP WGT.& BOX (IN.) | |
|---|---|---|---|---|---|
| 30 INCH | 66.1 | 57.1 | GTCH363- | | |
| 40 INCH | 76.1 | 67.1 | GTCH364- | 685 LB | 33 X 34 X 89 |

| ITEM | QUT. | DESCRIPTION | PART NO. |
|---|---|---|---|
| 1 | 6 | EYEBOLT KIT. 7/8-9 X 5.3 LG B7 | G-EBA-B74-5-5.3-(GB OR EP) |
| 2 | 12 | TIE ROD NUT ( M12) | G-TRN-6 |
| 3 | 12 | TIE ROD. THD. BOTH ENDS (M12) | G-TR-6-20.30.40 |
| 4 | 36 | SPRING HOLD DOWN | G-SA-6 |
| 5 | 12 | HOLD DOWN PLT:CLOSED & DOE CART. | GTCH-TRI-6-D-HD (GB OR EP) |
| 5A | 12 | HOLD DOWN PLT: FIN CARTRIDGE | GTCH-TRI-6-2-HD (GB OR EP) |
| 6 | 1 | SEAL O-RING BUNA-N STD. | G-O-RING |
| 7 | 36 | V-POST | G-VP-6-20.30.40 |
| 8 | 1 | HAND WHEEL 9 INCH DIA. | G-HW-4-9 |

| | NAME | DATE |
|---|---|---|
| DRAWN | GA | 8/17/10 |
| REV | A | 9/07/10 |
| | | |
| | | |
| MAT. | SEE DATA SHEET | |
| FINISH | SEE DATA SHEET | |

COMMENTS:
SEE VESSE DATA
SHEET FOR OPTIONS

GLOBAL FILTER LLC

CEDAR RAPIDS.IA

(36) CARTRIDGE HOUSING
GTCH36 4" FLG.
DOE AND 222 SEAL

SIZE A | GTCH36-4F-OS | A

SHEET OF